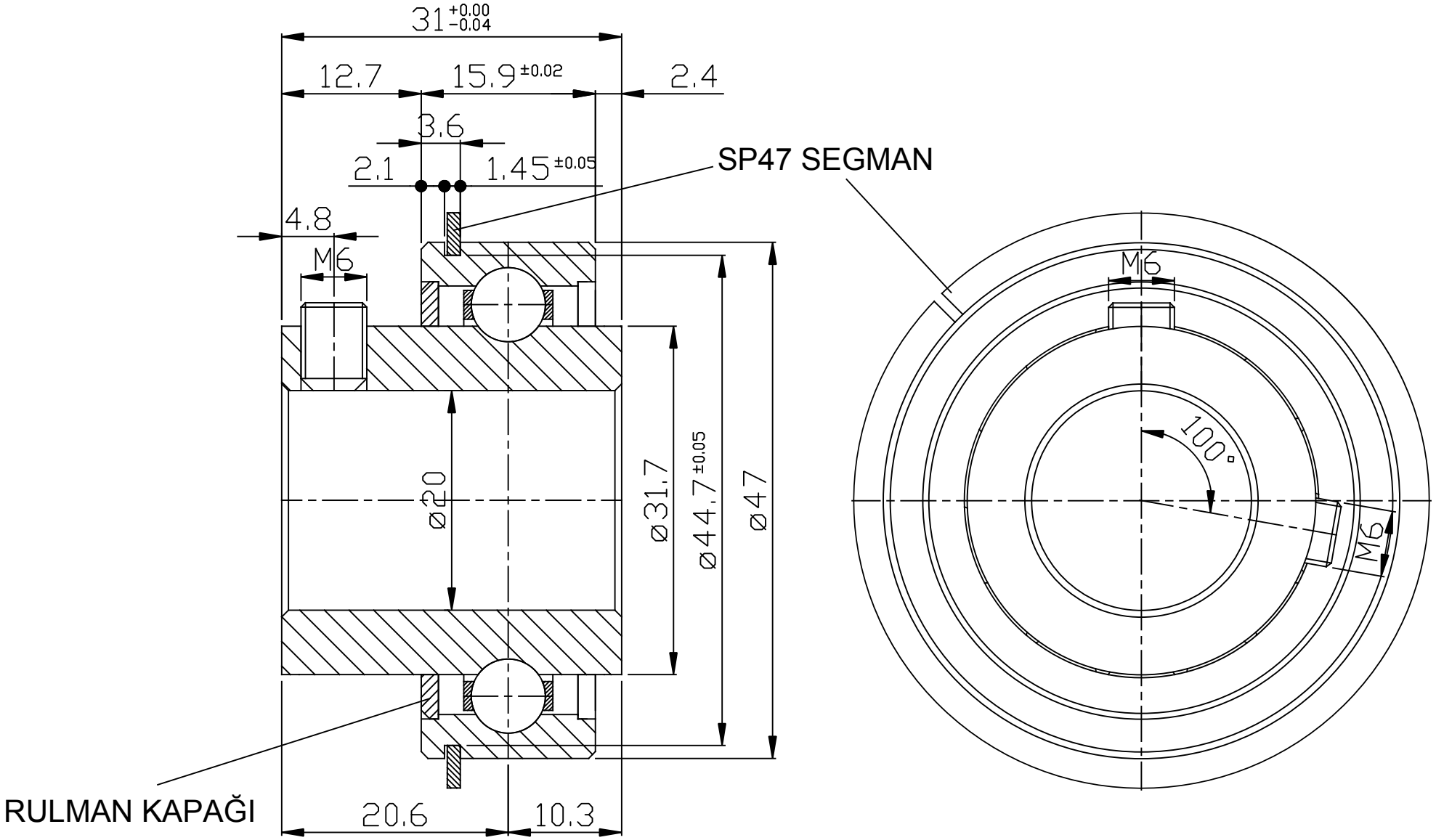

ER204 RULMAN
640 ADET